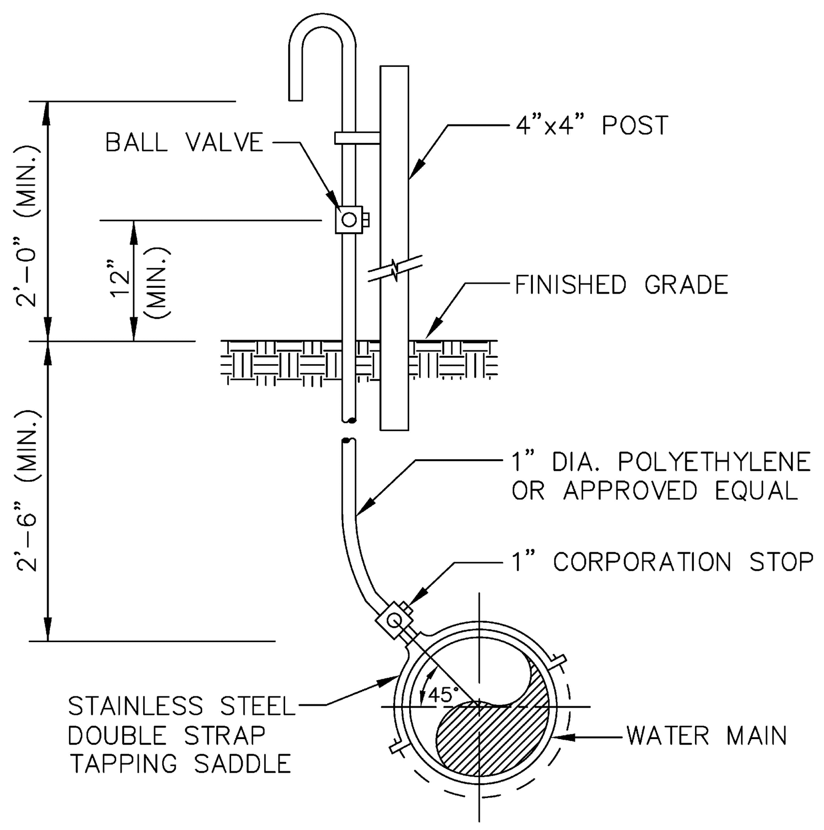

SAMPLE POINT (MAIN)

ALL D.I.P. TO BE PAINTED BLUE ON TOP HALF OF PIPE.

ENGINEERING STANDARDS 2025

REVISIONS				
BY	DATE	ENGINEERING DIVISION CITY OF POMPANO BEACH	SAMPLE POINT (MAIN)	DATE: MAY 2022 DWG. NO. 100-1
S.S.	04-2005	SCALE: N.T.S.		

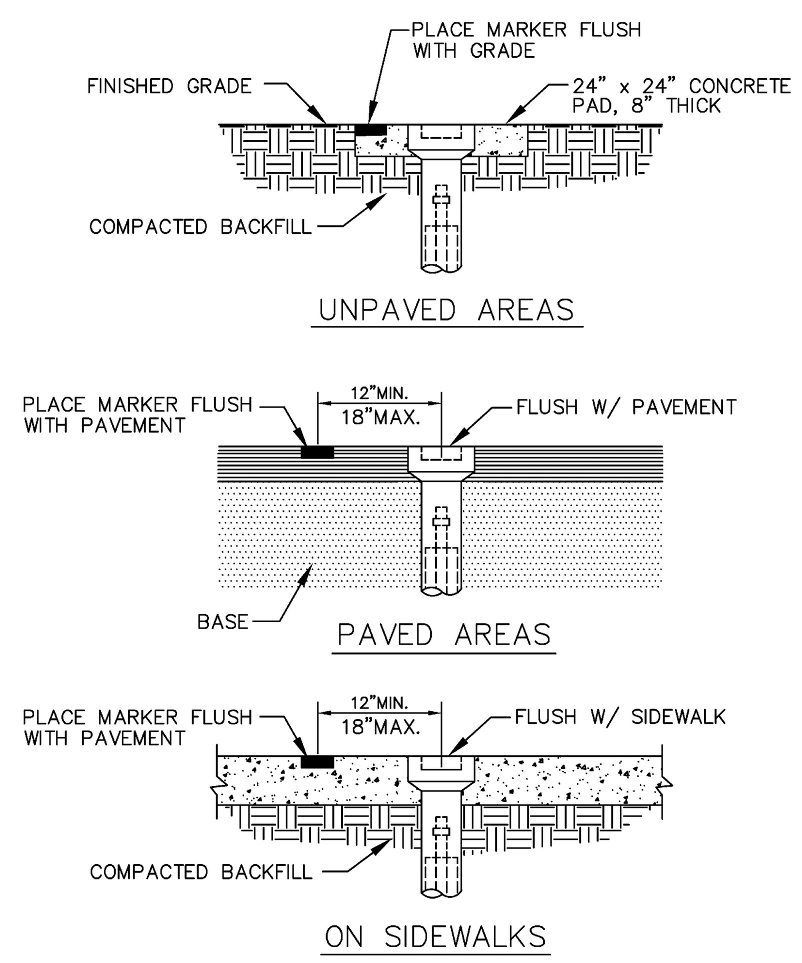

VALVE BOX SETTINGS

ENGINEERING STANDARDS 2025

REVISIONS				
BY	DATE	ENGINEERING DIVISION CITY OF POMPANO BEACH	VALVE BOX SETTINGS	DATE: MAY 2022 DWG. NO. 102-1
S.S.	04-2005	SCALE: N.T.S.		

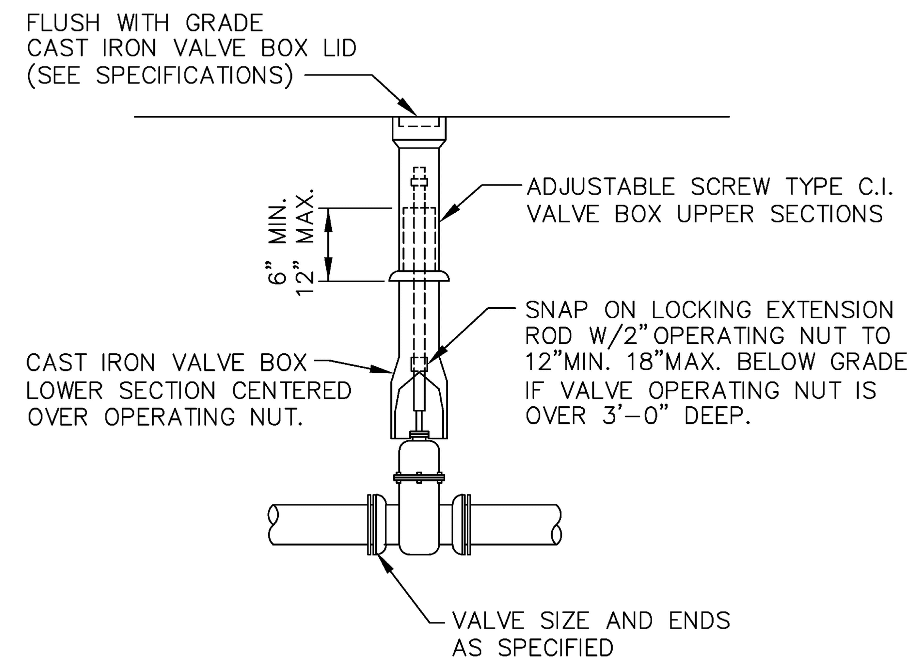

GATE OR PLUG VALVE SETTING

USE MEGALUGS AT ALL PIPE JOINTS

ALL D.I.P. TO BE PAINTED BLUE ON TOP HALF OF PIPE.

ENGINEERING STANDARDS 2025

REVISIONS				
BY	DATE	ENGINEERING DIVISION CITY OF POMPANO BEACH	GATE OR PLUG VALVE SETTINGS	DATE: MAY 2022 DWG. NO. 103-1
S.S.	04-2005	SCALE: N.T.S.		
T.W.	11-2007			

DRC
PZ24-12000026
08.20.2025

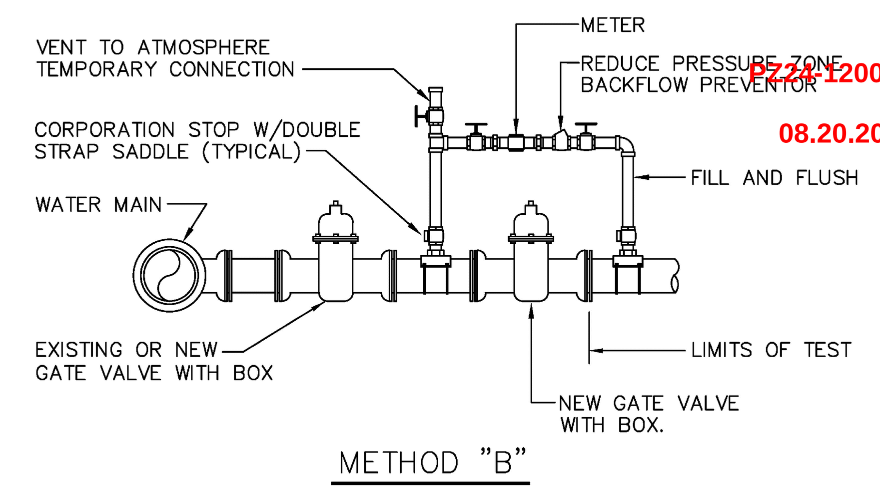

METHOD "B"

NOTES:

1. WATER MAIN TO BE PRESSURE TESTED AND DISINFECTED ACCORDING TO BROWARD COUNTY PUBLIC HEALTH UNIT REGULATIONS, AWWA, AND MUNICIPAL SPECIFICATIONS IN EFFECT.
2. BACTERIOLOGICAL TESTS ARE TO BE PERFORMED BY THE CONTRACTOR AND AN APPROVED TESTING LABORATORY.
3. REMOVE TEMPORARY CONNECTION AT SADDLE ON NEW MAINS AFTER FILLING AND FLUSHING HAS BEEN COMPLETED AND REPLACE WITH BRASS PLUG
4. PROVIDE ALL NECESSARY THRUST BLOCKS OR OTHER RESTRAINTS.
5. FILLING AND FLUSHING LOCATIONS SHALL BE COORDINATED BY THE CONTRACTOR, ENGINEER, AND CITY.
6. VENT TO ATMOSPHERE SHALL REMAIN OPEN DURING ALL PHASES OF PRESSURE TESTING.
7. AFTER COMPLETION FILL AND FLUSH CONNECTION
8. USE MEGALUGS AT ALL PIPE JOINTS

FILLING AND FLUSHING CONNECTION

ALL D.I.P. TO BE PAINTED BLUE ON TOP HALF OF PIPE.

ENGINEERING STANDARDS 2025

REVISIONS				
BY	DATE	ENGINEERING DIVISION CITY OF POMPANO BEACH	FILLING / FLUSHING CONNECTION	DATE: MAY 2022 DWG. NO. 104-1
S.S.	04-2005	SCALE: N.T.S.		
T.W.	11-2007			
S.S.	01-2012			

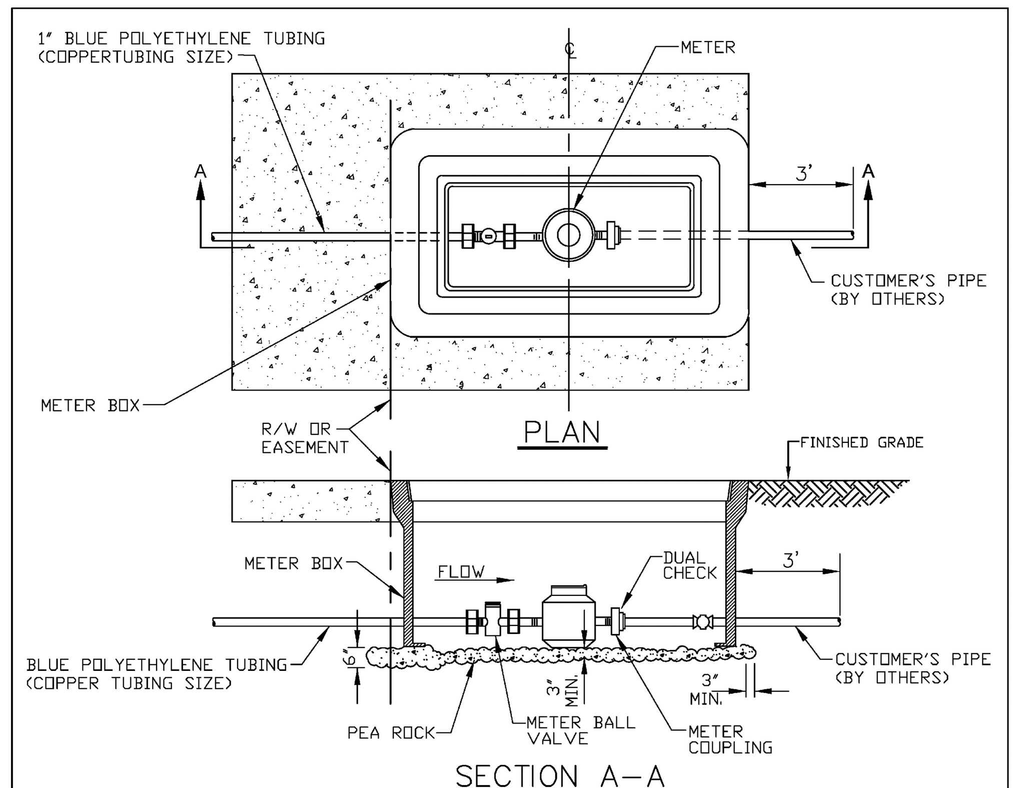

NOTES:

1. ALL METERS WILL BE SUPPLIED AND INSTALLED BY COPB UTILITIES METER HAS IRON PIPE THREAD MALE CONNECTION ON EACH END.
2. METER SHALL BE CENTERED IN BOX.
3. DUAL CHECK IS SAME SIZE AS CUSTOMER'S SERVICE LINE.

METER SIZE	LAYING LENGTH (IN)	HEIGHT (IN)
⅝"	7.5	4.56
1"	10.75	5.75

METER BOX INSTALLATION

ENGINEERING STANDARDS 2025

REVISIONS				
BY	DATE	ENGINEERING DIVISION CITY OF POMPANO BEACH	METER BOX INSTALLATION FOR 5/8" AND 1" METERS	DATE: JAN. 2022 DWG. NO. 105-2
S.S.	11-2012	SCALE: N.T.S.		

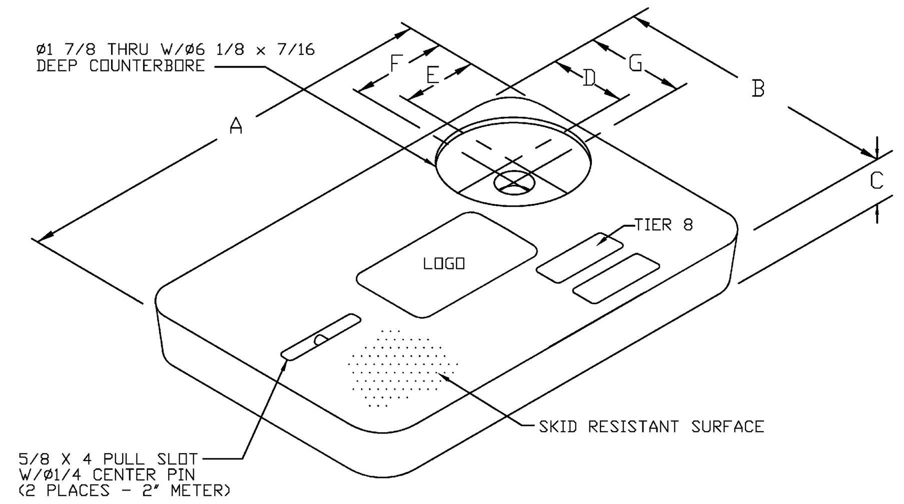

METER BOX COVER DIMENSIONS (IN)							
METER SIZE	A	B	C	D	E	F	G
1"	18 1/8"	11 1/4"	1 3/4"	3 3/4"	4"	4 9/16"	4 5/16"
1 1/2"	23 1/4"	13 3/4"	2"	4"	4"	4 9/16"	4 9/16"
2"	30 1/2"	17 1/2"	2"	4"	4"	4 9/16"	4 9/16"

NOTES

1. CUSTOMER IS CITY OF POMPANO BEACH FLORIDA LOGO TO BE SPECIFIED: CITY OF POMPANO BEACH POTABLE WATER
2. FITS NEPTUNE R450 ANTENNA
3. THIS COVER IS RATED FOR A STATIC DESIGN LOAD OF 8,000 LBS. (35,548 N) OVER A 10 (254) X 10 (254) AREA AND MUST PASS A MINIMUM STATIC TEST LOAD OF 12,000 LBS (53,376 N).
4. METER BOX COVER SHOULD BE RATED FOR TRAFFIC CONDITION AS DETERMINED BE ENGINEER OF RECORD.

POTABLE WATER METER BOX COVER

ENGINEERING STANDARDS 2025

REVISIONS				
BY	DATE	ENGINEERING DIVISION CITY OF POMPANO BEACH	TYPICAL METER BOX COVER	DATE: JAN. 2022 DWG. NO. 105-3
S.S.	11-2012	SCALE: N.T.S.		

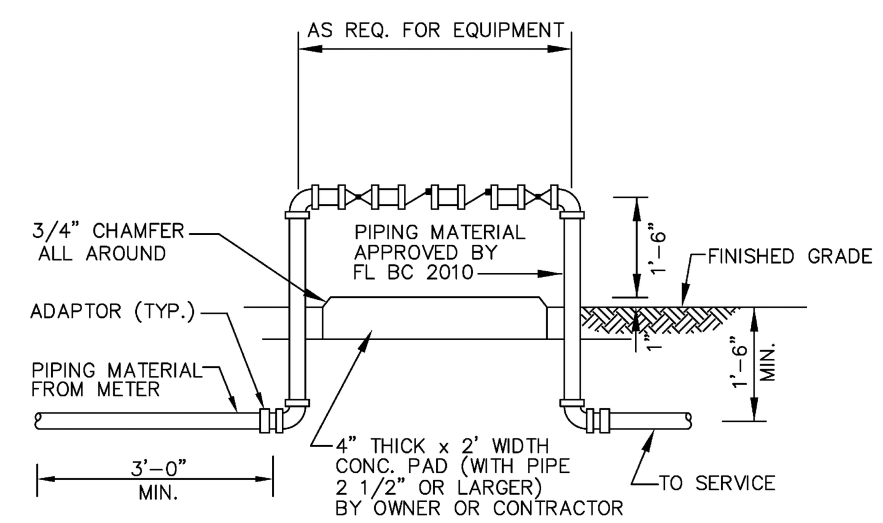

BACKFLOW PREVENTER

USE MEGALUGS AT ALL PIPE JOINTS 3" AND LARGER
PLEASE SEE METER INSTALL DIMENSION LIST ON STANDARD NO. 106-4
SMALL UNITS UNI-STRUT SUPPORT

ENGINEERING STANDARDS 2025

REVISIONS				
BY	DATE	ENGINEERING DIVISION CITY OF POMPANO BEACH	BACKFLOW PREVENTER	DATE: MAY 2022 DWG. NO. 106-1
T.W.	04-2008	SCALE: N.T.S.		
S.S.	03-2009			
S.S.	11-2012			
S.S.	01-2013			

DRC
PZ24-12000026
07.02.2025

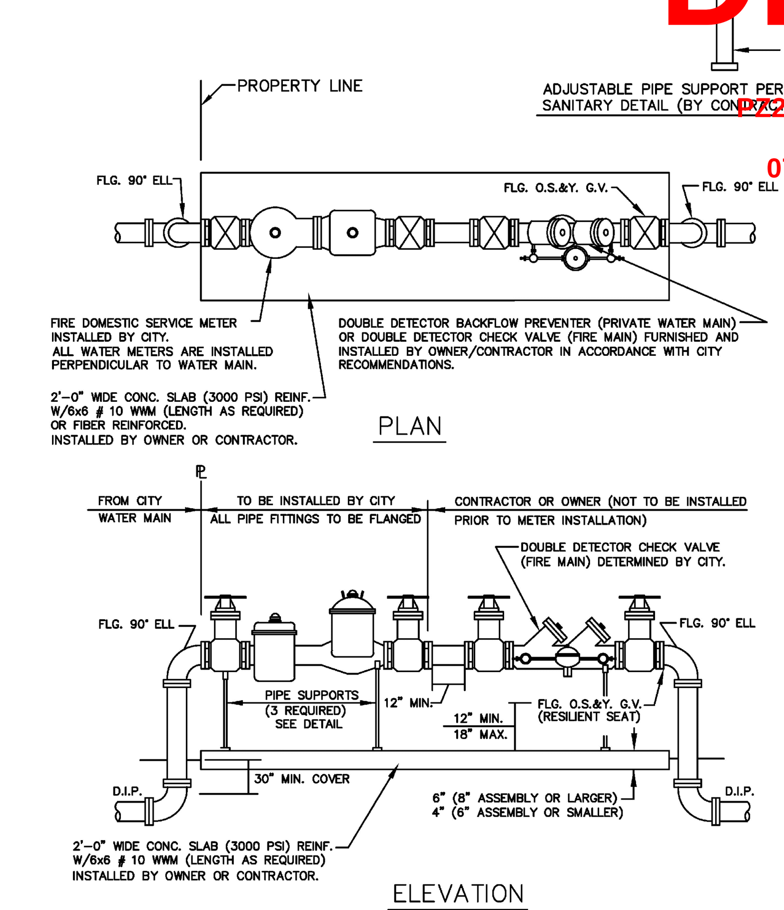

FIRE ONLY METER AND BACKFLOW DEVICE DETAILS

NOTES

1. THE BACKFLOW PREVENTOR FOR THE BY-PASS SHALL BE DDCV OR RPZ.
2. PLEASE NOTE THAT WATER METERS 3" AND LARGER ARE SUBJECT TO AN APPROXIMATE ORDER LEAD TIME OF 60 TO 75 DAYS AFTER FULL PAYMENT. PLEASE CONTACT CUSTOMER SERVICE AT 954-786-4637 TO ARRANGE FOR METER PROCUREMENT AND INSTALLATION.
3. USE MEGALUGS AT ALL PIPE JOINTS
4. PLEASE SEE METER INSTALL DIMENSION LIST ON STANDARD NO. 106-4

ENGINEERING STANDARDS 2025

REVISIONS				
BY	DATE	ENGINEERING DIVISION CITY OF POMPANO BEACH	FIRE ONLY METER AND BACKFLOW DEVICE	DATE: MAY 2022 DWG. NO. 106-3
S.S.	05-2011	SCALE: N.T.S.		
S.S.	11-2012			
S.S.	12-2013			
S.S.	11-2016			

DATE:	04/30/25
SCALE:	AS SHOWN
DESIGN BY:	CEE
DRAWN BY:	TR
CHECKED BY:	CEE
APPROVED BY:	CEE

DATE:	BY:	DESCRIPTION:

CRAVEN • THOMPSON AND ASSOCIATES, INC.
ENGINEERS • PLANNERS • SURVEYORS
3563 N.W. 53RD STREET, FORT LAUDERDALE, FLORIDA 33309
FAX: (954) 739-6409 TEL.: (954) 739-6400
FLORIDA LICENSED ENGINEERING, SURVEYING & MAPPING BUSINESS No. 271
FLORIDA LICENSED LANDSCAPE ARCHITECTURE BUSINESS No. C000114

MATERIAL SHOWN HEREON IS THE PROPERTY OF CRAVEN THOMPSON & ASSOCIATES, INC. AND SHALL NOT BE REPRODUCED IN WHOLE OR IN PART WITHOUT WRITTEN PERMISSION OF CRAVEN•THOMPSON & ASSOCIATES, INC. COPYRIGHT © 2019

1501 WEST ATLANTIC BLVD.
POMPANO BEACH, FLORIDA

PREPARED FOR:
KAJA PROPERTIES INC.

WATER AND SEWER DETAILS

Chad Everett Edwards
Digitally signed by Chad Everett Edwards
Date: 2025.05.27 15:33:42 -04'00'

CHAD E. EDWARDS, P.E.
FLORIDA LICENSE No. 59306
2025-05-27

CHAD E. EDWARDS LICENSE No. 59306 STATE OF FLORIDA PROFESSIONAL ENGINEER

PROJECT NO.
24-0055-001-01

C-11

SHEET 11 OF 14

This document has been digitally signed and sealed by Chad Everett Edwards, P.E. on the date indicated here. Printed copies of this document are not considered signed and sealed and the signature must be verified on any electronic copies.

\\ctafile02\Eng\Projects\2024\24-0055-001-01 1501 West Atlantic - Truck Wash\24-0055 WSD.dwg [C-11] May 27, 2025 9:24am TRUBINO